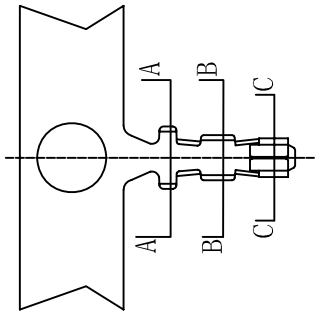

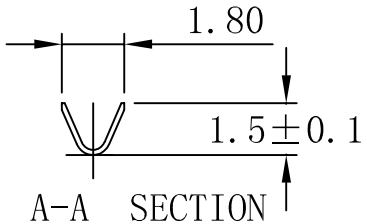

A-A SECTION

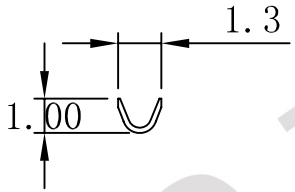

B-B SECTION

TERMINAL
Material:Phos.Bronze
Thickness:0.15mm
Plating:Tin Plated 60u″

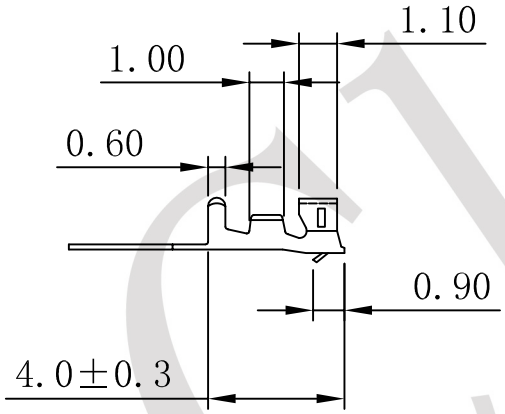

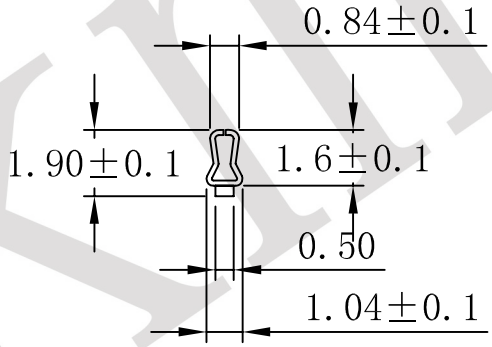

C-C SECTION

TOLERANCE TABLE	
.0	±0.20
.00	±0.10
.000	±0.05

APPROVED:	DATE:	Ckmtw 深圳市灿科盟实业有限公司 CHANKLEMENT INDUSTRYCO.,LTD	
CHECKED:	DATE:	TITLE: 1501T	
DRAWN: LYF	DATE: 2008-04-08	CLIENT P/N /	
		UNIT mm	SCALE free
		FILE NO. CKMTW-1501-0002	REV. A

Ckmtw