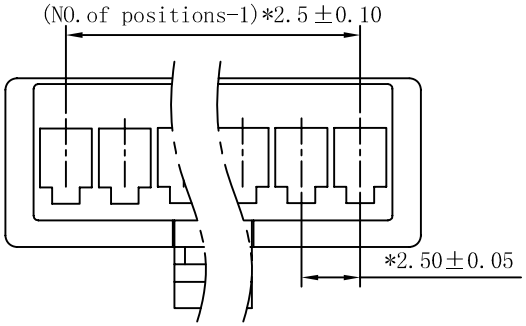

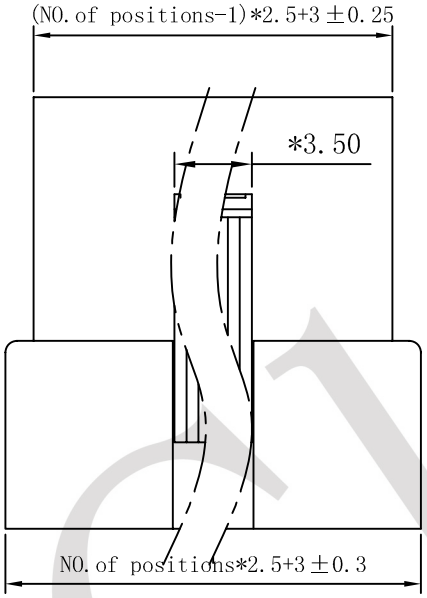

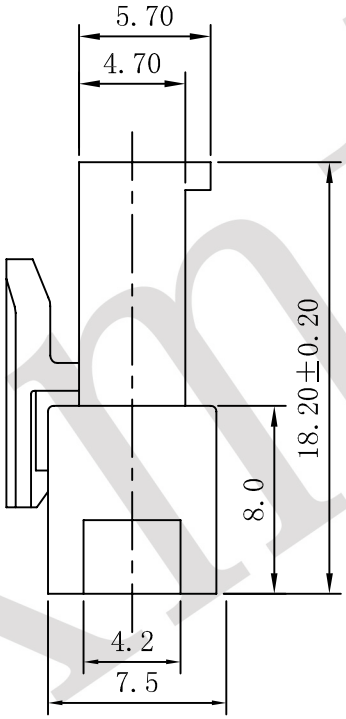

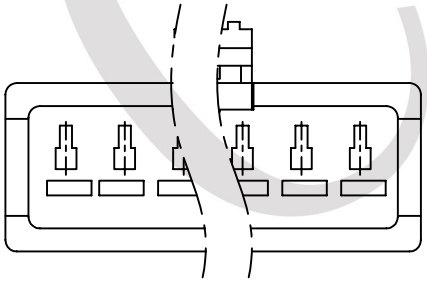

Specification
Current Rating:3A AC,DC Max
Insulation Resistance:500MΩ min
Withstand voltage:1000V AC for 1 minute
Temperature Range:-25° C～+85° C
(Including Temperature Rise)

Materiall: NYLON66 UL94V-2
2-12 &18 Circuits Available
Standard Color:Black

TOLERANCE TABLE	
.0	±0.20
.00	±0.10
.000	±0.05

APPROVED:	DATE:	Ckmtw 深圳市灿科盟实业有限公司 CHANKLEMENT INDUSTRYCO.,LTD
CHECKED:	DATE:	TITLE: SM2.5H-XP 母壳
DRAWN: LYF	DATE: 2008-05-21	CLIENT P/N /
		UNIT mm SCALE free
		FILE NO. CKM-SM2.5-0006 REV. A

CKM-QR-GC-07/A0

ckmtw