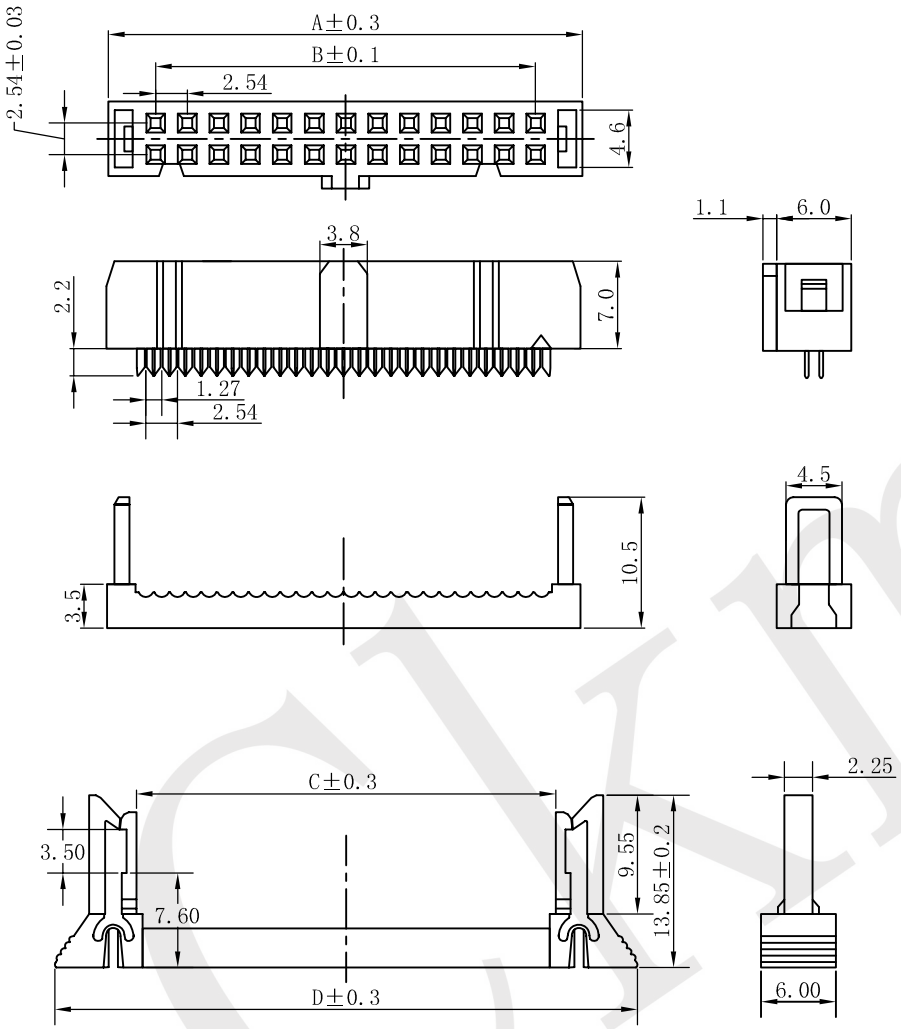

Material

Insulator : P.B.T+30%Glass Fiber(UL94V-0)
Contact : Phosphor Bronze or Brass
Contact Plated : Gold over Nickel or Tin

Specification

Current Rating : 1A
Insulation Resistance : 1000MΩ Min.at 500V DC
Dielectric Withstanding Voltage : 500V AC for 1 Minute
Operation Temperature : -55° C～+105° C
Contact Resistance : 15mΩ Max

POLES	PART No.	Dim. A	Dim. B	Dim. C	Dim. D
6	101-6P	12.66	5.08	9.0	22.1
8	101-8P	15.20	7.62	11.54	24.64
10	101-10P	17.74	10.16	14.08	27.18
12	101-12P	20.28	12.70	16.62	29.72
14	101-14P	22.82	15.24	19.16	32.26
16	101-16P	25.36	17.78	21.70	34.80
20	101-20P	30.44	22.86	26.78	39.88
24	101-24P	35.52	27.94	31.86	44.96
26	101-26P	38.06	30.48	34.40	47.50

POLES	PART No.	Dim. A	Dim. B	Dim. C	Dim. D
30	101-30P	43.14	35.56	39.48	~~52.58~~
34	101-34P	48.22	40.64	44.56	57.66
40	101-40P	55.84	48.26	52.18	65.28
44	101-44P	60.92	53.34	57.26	70.36
50	101-50P	68.54	60.96	64.88	77.98
56	101-56P	76.16	68.58	72.50	85.60
60	101-60P	81.24	73.66	77.58	90.68
62	101-62P	83.78	76.20	80.12	93.22
64	101-64P	86.32	78.74	82.66	95.76

TOLERANCE TABLE	
.0	±0.20
.00	±0.10
.000	±0.05

APPROVED:	DATE:	Ckmtw 深圳市灿科盟实业有限公司 CHANKEMENG INDUSTRYCO.,LTD
CHECKED:	DATE:	TITLE: 101-XP 有凸 配双钩反折
DRAWN: LYF	DATE: 2008-04-07	CLIENT P/N /
		UNIT mm SCALE free
		FILE NO. CKM-101-00004 REV. A

CKMTW