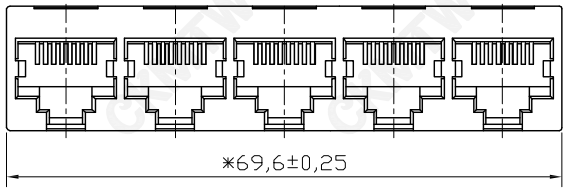

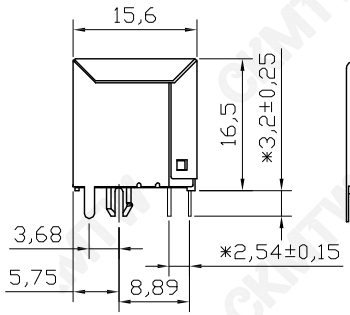

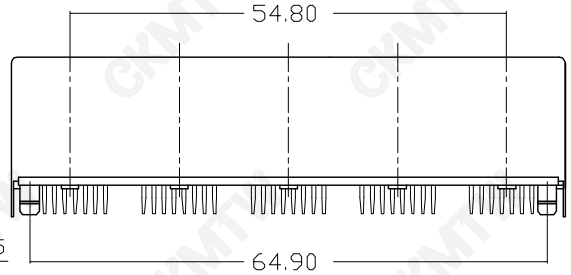

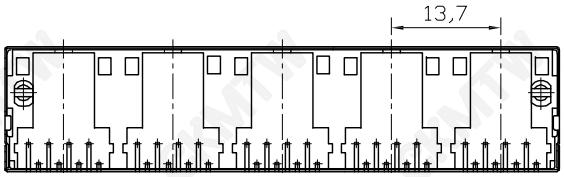

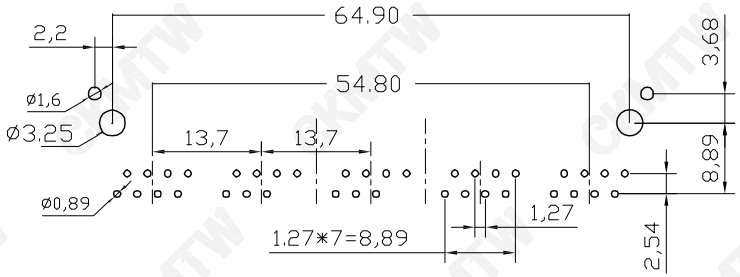

PC Board Layout
Component Side Shown

NOTES:

MATERIAL:

1.HOUSING MATERIAL :GLASS FILLED POLYESTER UL94V-0.
2.CONTACT MATERIAL :PHOSPHOR BRONZE
3.PLATING :SELECTING GOLD PLATING NICKEL

ELECTRICAL :

1.VOLTAGE RATING :125 VAC RMS.
2.CURRENT RATING :1.5 AMP.
3.CONTACT RESISTANCE :30 MILLIOHMS MAX.
4.INSULATION RESISTANCE :500 MEGOHMS MIN @ 500V DC
5.DIELECTRIC WITHSTANDING RESISTANCE
:1000V AC RMS 5OHz.1MIN.

MECHANICAL:

1.DURRABILITY: :750 CYCLES MIN:
2.PCB RETENTION PRE-SOLDER :1 LB MIN

ENVIRONMENTAL:

1.STORAGE :-40℃ TO 85℃
2.OPERATION :-25℃ TO 85℃.

TOLERANCE TABLE	
.0	±0.30
.00	±0.20
.000	±0.05

APPROVED:	DATE:	Ckmtw 深圳市灿科盟实业有限公司 CHANKLEMENT INDUSTRYCO.,LTD
CHECKED:	DATE:	TITLE: 网口插座 RJ45-8P/8C 52E-1*5 五胞胎 直插 带屏蔽 无灯无弹
DRAWN: ZYJ	DATE: 2016-06-21	PART.NO. R-RJ45S08P-B500
		UNIT mm SCALE free
		FILE NO. Ckmtw-RJ45-0153 REV. A HY04

CKM-QR-GC-07/A0